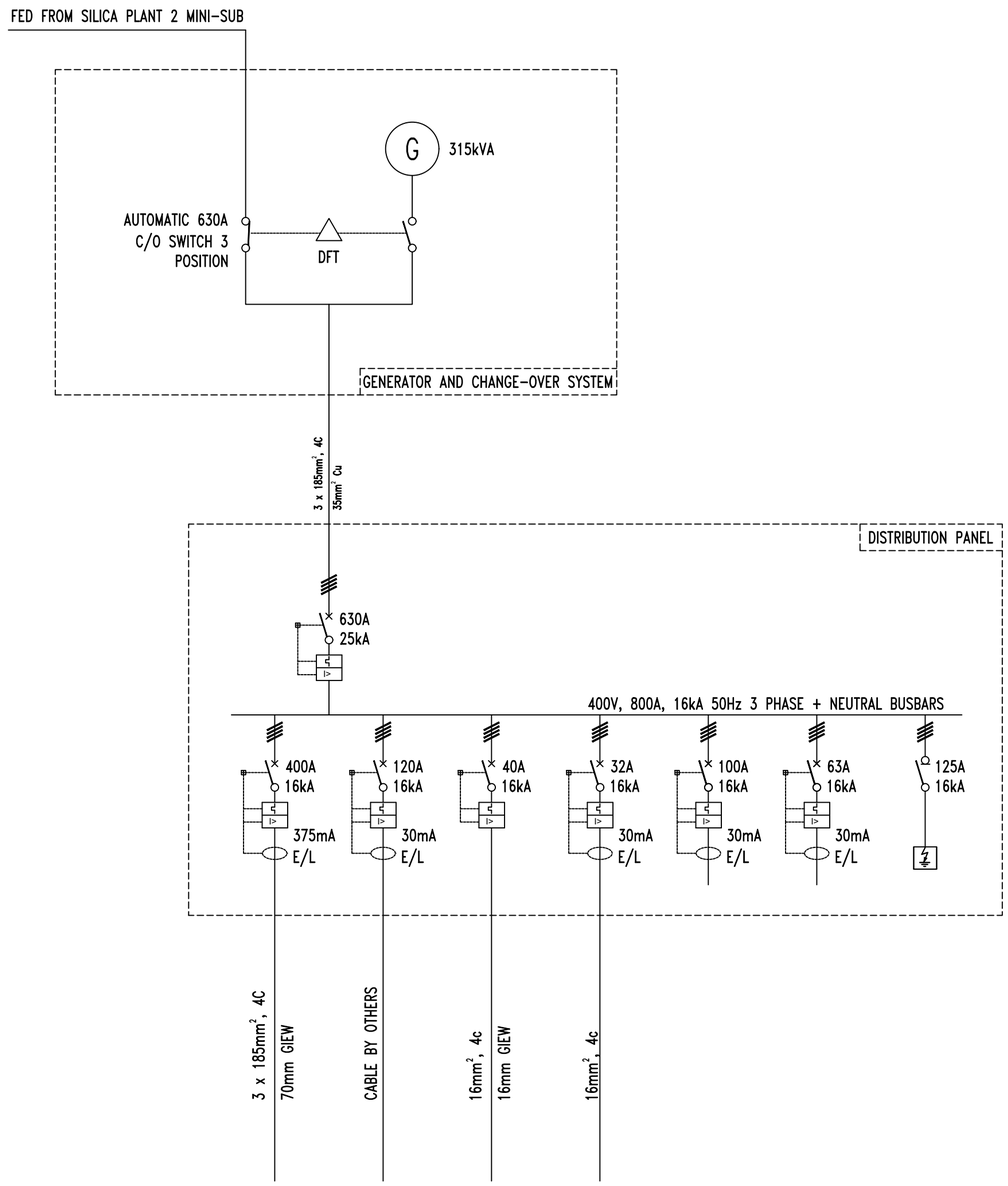

PHASE	RWBN	RWBN	RN	RWBN	–	–	RWBN
CURRENT (In)	–	–	–	–	–	–	–
DESCRIPTION	CHLORINE PLANT MCC FEEDER	POLY PLANT MCC FEEDER	GENERATOR ROOM SP&L DB	WELDING PLUG	SPARE	SPARE	SPD CLASS 1 + 2

RA 71701

LEGEND:

1. ALL WORK SHALL BE IN COMPLIANCE WITH SANS 10142 WIRING CODE.

REVISIONS

No	DATE	CHECKED	APPROVED	DESCRIPTION
A	24-04-03	G.MERABA	G.MERABA	PRELIMINARY DESIGN

NUMBER	TITLE

REFERENCE DRAWINGS

RAND WATER
BOX 1127
JOHANNESBURG
2000
TEL: +27 11 682-0911

SAP PROJECT No.:	P.03753	CHECKED:	
NETWORK ID No.:	4046072	SECTION HEAD:	
CONTRACT:	RW01197/15	APPROVED:	
FILE:	RW01197/15		
DRAWN BY:	G.MERABA	SIGNATURE	
TRACED BY:	L.ZIKALALA	Pr Eng. No.	
DATE:	2024-04-03	DATE	

VEREENIGING PUMPING STATION
DISINFECTION PLANT
DIESEL GENERATOR
PRELIMINARY
SINGLE LINE DIAGRAM

STATION: VG | WKS: #02UGE05 | DOC. TYPE: DES | S: A

© RAND WATER 2004 All Rights Reserved

SCALE : N.T.S.

RA 71701 | REVISION A